DELTA FIRE

World Class Fire Products

EXCEL

OPERATING AND MAINTENANCE MANUAL
HIGH EXPANSION FOAM GENERATORS

INTRODUCTION

The Excel produces foam by blowing air across a nylon net sprayed with foam solution. The unit is driven by a powerful water turbine, which drives the fan. A by-pass valve allows an increased water flow through the turbine, excess water running to waste. The increased air flow permits higher expansion foam to be produced and also increases the ability of the unit to operate against high back pressures.

The Excel is supplied with a length of polythene foam ducting, which can be fastened to the front of the unit to conduct foam from a distance to the fire. The foam forces the tubing to unroll and, on reaching the fire, any excess tubing is burnt off so that the foam is spread efficiently in the burning area.

A dual purpose smoke extraction version with smoke extraction ducting is also available.

OPERATING INSTRUCTIONS

1. Operating Procedure-without polythene foam ducting.

(a) Connect water delivery hose to water inlet.

(b) If the water by-pass is to be used, connect discharge hose to water outlet and lead off to drain or return to main water supply.

(c) Open nozzle valves on side of Excel body (Smoke extraction models only).

(d) Turn on water supply. For optimum foam production, water pressure should be between 5-10 bar. Maximum inlet water pressure should not be greater than 10 bar.

(e) Place pick-up stick in a container of synthetic high expansion foam concentrate.

(f) Adjust by-pass control valve to give required foam expansion.

2. Operating Procedure-with polythene foam ducting.

(a) Remove the four pins from the front channel sections of the Excel body.

(b) Remove channel sections to expose square sections on Excel body.

(c) Place one end of polythene ducting over the square section, starting at the bottom first. Refit the four channel sections and push the pins through to pierce the polythene ducting. Position the ducting in front of the Excel so that it will unfold towards the fire when foam production starts.

(d) Follow the instructions outlined in section 1.

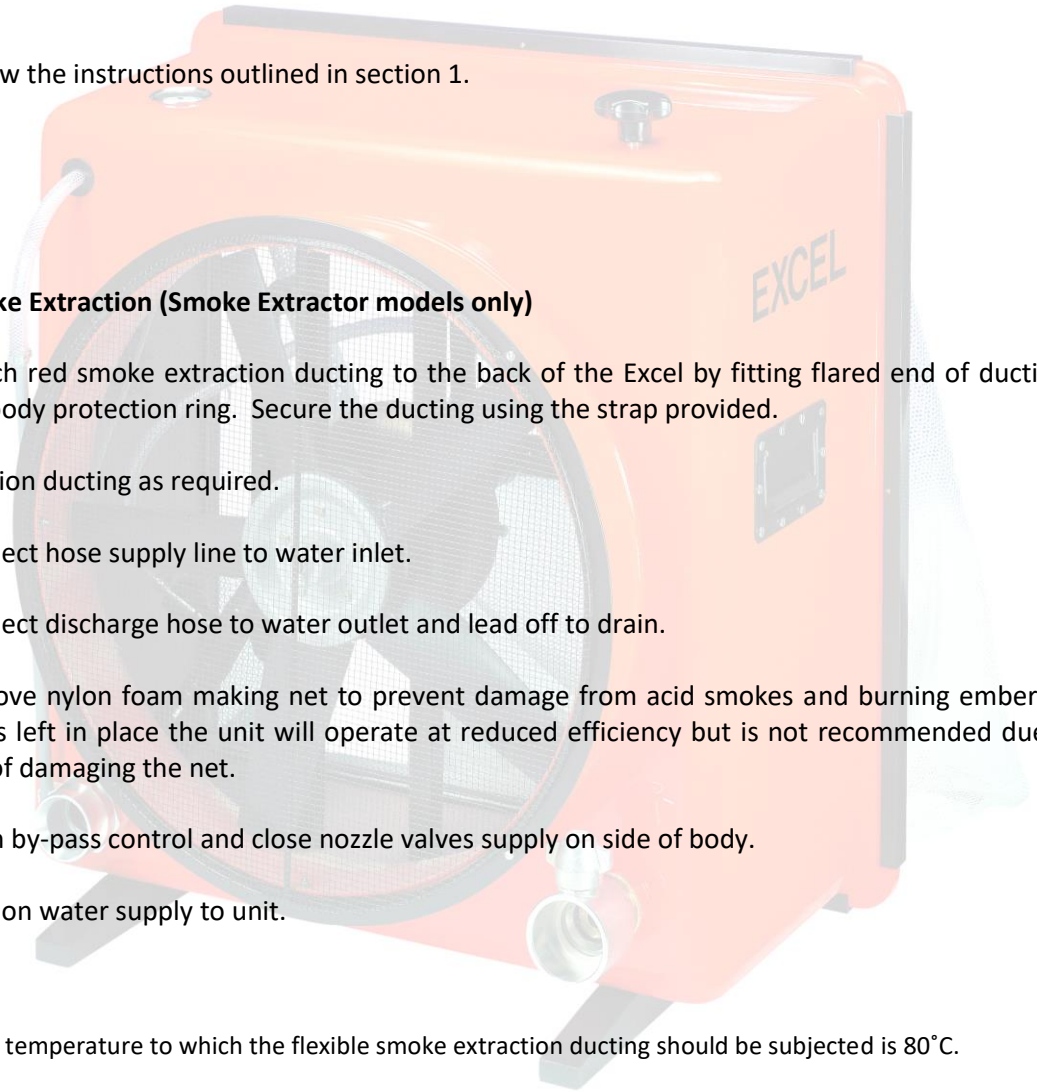

3. Smoke Extraction (Smoke Extractor models only)

a) Attach red smoke extraction ducting to the back of the Excel by fitting flared end of ducting over the body protection ring. Secure the ducting using the strap provided.

b) Position ducting as required.

c) Connect hose supply line to water inlet.

d) Connect discharge hose to water outlet and lead off to drain.

e) Remove nylon foam making net to prevent damage from acid smokes and burning embers. If the net is left in place the unit will operate at reduced efficiency but is not recommended due to the risk of damaging the net.

f) Open by-pass control and close nozzle valves supply on side of body.

g) Turn on water supply to unit.

Note:-
The maximum temperature to which the flexible smoke extraction ducting should be subjected is 80˚C.

PERFORMANCE

1. Foam Production.

a) The quantity of foam produced by the Excel may vary according to ambient temperature, the quality of foam concentrate used, the conditions encountered during use such as variations of pressure inside buildings, the length of ducting used, and the amount of bends in the ducting.

By-Pass Control	Water Pressure Bars	Total Water L/Min	By-Pass Nozzles L/Min	Flow to Nozzles L/Min	Foam Production M^3/min	Foam Expansion
Open	4 7 10	205 285 330	60 90 105	145 195 225	100 156 220	750 to 1200
By-Pass Closed	4 7 10	190 260 310	Nil Nil Nil	190 260 310	85 145 200	450 to 850

2. Smoke Extraction (Smoke Extraction unit only).

a) Air flow will be reduced by sharp bends in the smoke ducting. Under ideal conditions the unit has the capability of extracting 285m^3/min.

GERNERAL OPERATIONAL CONSIDERATIONS

a) To prevent undue back pressure the area to be filled with foam should be well vented above the level to which the foam will rise.

b) To help the unit overcome back pressure it should be operated with the by-pass valve open.

c) By reducing the supply pressure or the flow through the by-pass foams of lower expansion and greater fluidity can be produced.

MAINTENANCE OF EXCEL

The Excel is designed so that very little maintenance is from the user. The gunmetal turbine is fitted with a sealed bearing unit, which requires no lubrication. Under normal working conditions the machine needs no annual maintenance and is ready for immediate operation when required provided that care has been taken to clean the unit after operation. The following cleaning operation is recommended after use.

a) Remove foam making net by unscrewing the four thumb screws on the front of the Unit. Wash the net thoroughly with clean water to remove foam residue and hang to drip dry. If the net becomes damaged during use it should be replaced. Therefore it is good practice to keep a spare net assembly in stock for immediate replacement. (Part No DME 1013).

b) Using a low pressure water jet or spray, was the outside of the unit making sure all traces of foam residue and salt (if salt water has been used) has been removed.

c) Flush out the inductor system by running the unit with the pick-up stick in a container of clean water. Also flush out all pipework with clean water.

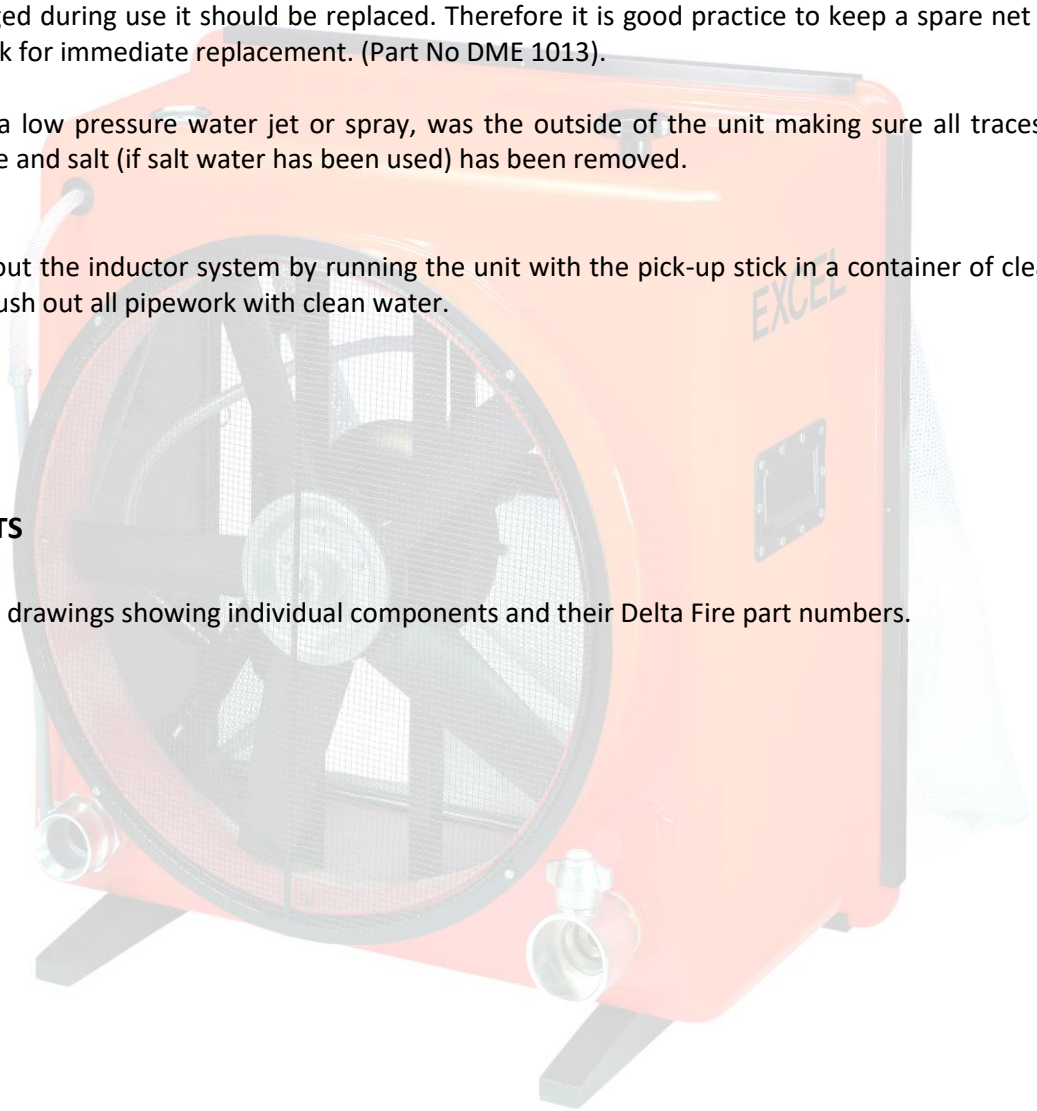

SPARE PARTS

See attached drawings showing individual components and their Delta Fire part numbers.

3rd ANGLE PROJECTION

A3

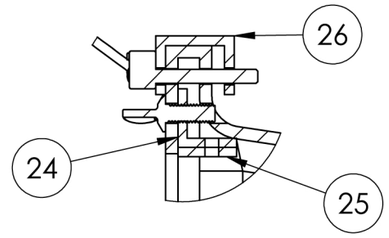

DETAIL B

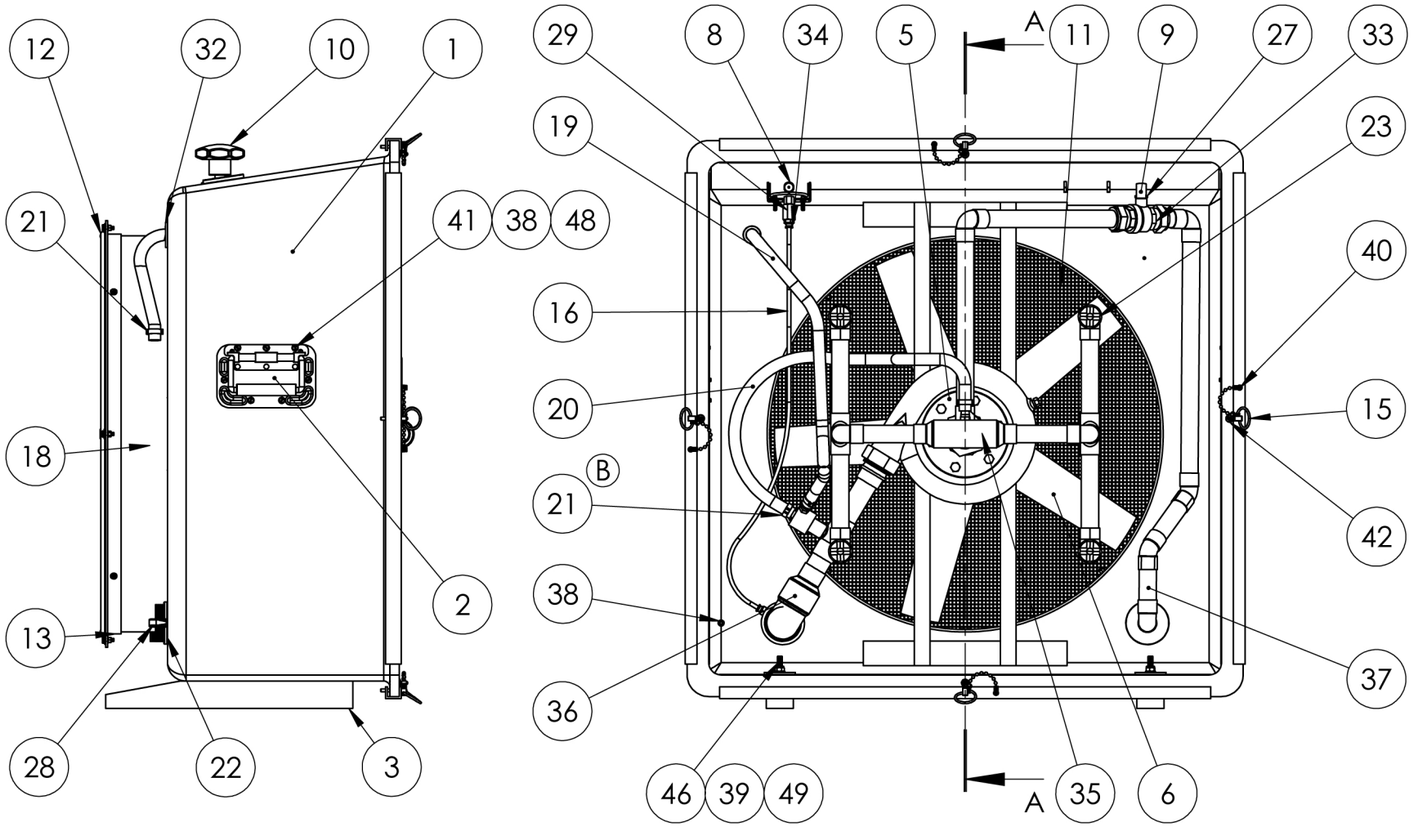

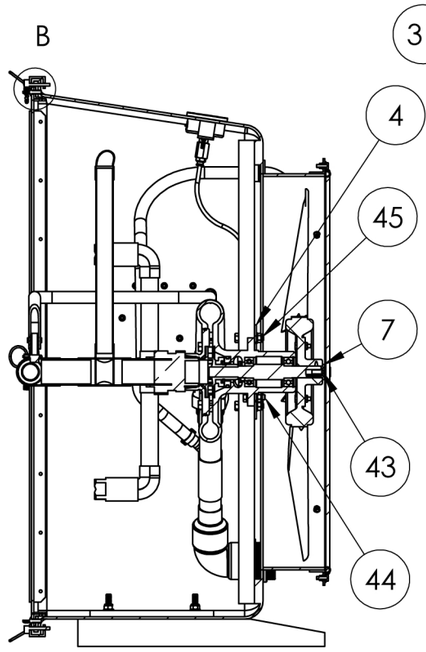

SECTION A-A
SCALE 1 : 10

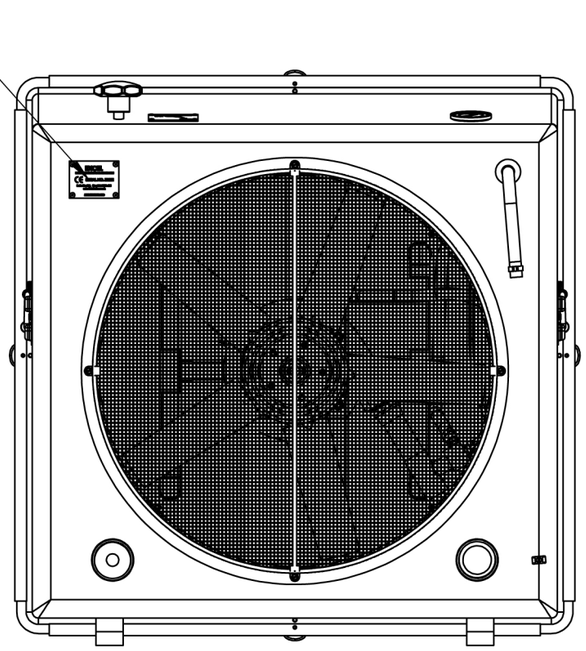

ITEMS NOT SHOWN: 14, 17, 48

REV.	DESCRIPTION	ECN	DATE	SIG.
C	VARIOUS SMALL UPDATES SEE ECR	2269	02/02/2024	JRS
B	SWAPPED JUBILEE FOR OETIKA CLIPS	2227	02/11/2023	TMH
A	INITIAL RELEASE	2093	19/01/2023	TMH

DELTA FIRE
2 BURTT WAY
BROADLAND BUSINESS PARK
NORWICH
NR7 0FE
TEL: (+44 (0)1603 735000)
FAX: (+44 (0) 1603 735009)

MATERIAL	AS PARTS
DRAWN	TMH
DATE	19/01/2023
CHECKED	PTJ

FINISH: AS PARTS

TOLERANCES
(UNLESS OTHERWISE STATED)
0. - ±0.2mm
0.0 - ±0.1mm
0.00 - ±0.05mm
ANGULAR - ±0.5°

TITLE: EXCEL HIGH EXPANSION FOAM GENERATOR 2" BSP MALE

DRAWING No. FEP341000

REV. C

(1) ALL BURRS AND SHARP EDGES TO BE REMOVED.
(2) DO NOT SCALE DRAWING.

THIS DOCUMENT IS COPYRIGHTED, ALL RIGHTS RESERVED. THIS DOCUMENT MAY NOT, IN WHOLE OR PART, BE COPIED PHOTOGRAPHED, REPRODUCED OR TRANSLATED IN ANYWAY OR FORM WHATSOEVER, WITHOUT THE PRIOR WRITTEN CONSENT OF DELTA FIRE LTD.

SH. 1
OF 3

3rd ANGLE PROJECTION

A3

ITEM NO.	PART NUMBER	DESCRIPTION	QTY.
1	XFDME1000	EXCEL BODY	1
2	XFDME1001	EXCEL SURFACE HANDLE	2
3	XFDME1002	EXCEL FEET	2
4	XFDME1004	EXCEL BACKING PLATE	1
5	XFDME1005	TURBINE ASSEMBLY	1
6	XFDME1006	MULTIWING IMPELLER	1
7	XFDME10061	EXCEL COUNTERSUNK FAN WASHER	1
8	XFDME1007	PRESSURE GAUGE 1/4" BSP PARALLEL MALE BACK ENTRY	1
9	XFDME1008	TOP EXPANSION CONTROL SHAFT	1
10	XFDME1009	CONTROL KNOBS	1
11	XFDME1010	GRILL COMPLETE	1
12	XFDME1011	GRILL FIXING CLIPS	4
13	XFDME1012	BODY PROTECTION RING	1
14	XFDME1013	FOAM NET	1
15	XFDME1015	NET (LYNCH) PIN	4
16	XFDME1017	PRESSURE GAUGE PIPE	1
17	XFDME1019	EXCEL 30M CLEAR POLYTHENE DUCTING	1
18	XFDME1020	PICK-UP TUBE	1
19	XFDME1021 A	1/2" BORE BRAIDED PVC TUBE	1
20	XFDME1021 B	1/2" BORE BRAIDED PVC TUBE	1
21	XFDME1022	3/4" OETIKA CLIP	4
22	XFDME1028	LOCKING RING	2
23	XFDME1029	EXCEL 200 SWIRLER NOZZLE ASSEMBLY	4
24	XFDME1047	NET ANGLE	4
25	XFDME1048	NET FLAT	4

ITEM NO.	PART NUMBER	DESCRIPTION	QTY.
26	XFDME1049	NET CHANNEL	4
27	XFDME1101	3.0 X 20 TENSION SPRING	1
28	XFDME1102	WHITE OPEN CLIP	1
29	XFDME1103	1/4" FEMALE HEX SOCKET	1
30	XFDME2010	BYPASS CONTROL LABEL	1
31	XFDME2030	EXCEL LABEL	1
32	XFDMFC107	TANK BUSH	1
33	XFEFE1025	1" BALL VALVE	1
34	XFEFE1046	1/4" BSP PNEUMATIC FITTING 101250628	2
35	XFEXCEL01	EXCEL PIPEWORK ASSEMBLY - A	1
36	XFEXCEL03	EXCEL PIPEWORK ASSEMBLY - INLET	1
37	XFEXCEL04	EXCEL PIPEWORK ASSEMBLY - OUTLET	1
38	XNU050001	M5 STAINLESS NYLOCK NUT	23
39	XNU080001	M8 NYLOC	12
40	XSC041005	M4 X 10 SPH SCREW	4
41	XSC051605	M5 X 16 SPH SCREW A4	22
42	XSC061606	SHOULDERLESS THUMB HEAD SCREW	4
43	XSC081605	M8 X 16 COUNTERSUNK HEX SCREW	1
44	Default	M8 x 30 HEX HEAD SCREW A4	4
45	XSC084008	M8 X 40 HEX HEAD SCREW A4	4
46	XSC087508	M8 X 75 HEX HEAD SCREW A4	4
47	XR0000002	4mm RIVET	8
48	XWA050001	M5 FLAT WASHER A4	45
49	XWA080001	M8 FLAT WASHER A4	16
50	XSC052504	M5 X 25 CSK HEAD SCREW A4	1

DELTA FIRE

2 BURTT WAY
BROADLAND BUSINESS PARK
NORWICH
NR7 0FE
TEL: (+44 (0)1603 735000)
FAX: (+44 (0) 1603 735009)

MATERIAL	AS PARTS
FINISH	AS PARTS
DRAWN	TMH
DATE	19/01/2023
CHECKED	PTJ

TOLERANCES (UNLESS OTHERWISE STATED)
0. - ±0.2mm
0.0 - ±0.1mm
0.00 - ±0.05mm
ANGULAR - ±0.5°

TITLE EXCEL HIGH EXPANSION FOAM GENERATOR 2" BSP MALE

DRAWING No. FEP341000

REV. C

(1) ALL BURRS AND SHARP EDGES TO BE REMOVED.
(2) DO NOT SCALE DRAWING.

THIS DOCUMENT IS COPYRIGHTED, ALL RIGHTS RESERVED. THIS DOCUMENT MAY NOT, IN WHOLE OR PART, BE COPIED PHOTOGRAPHED, REPRODUCED OR TRANSLATED IN ANYWAY OR FORM WHATSOEVER, WITHOUT THE PRIOR WRITTEN CONSENT OF DELTA FIRE LTD.

3rd ANGLE PROJECTION

A3

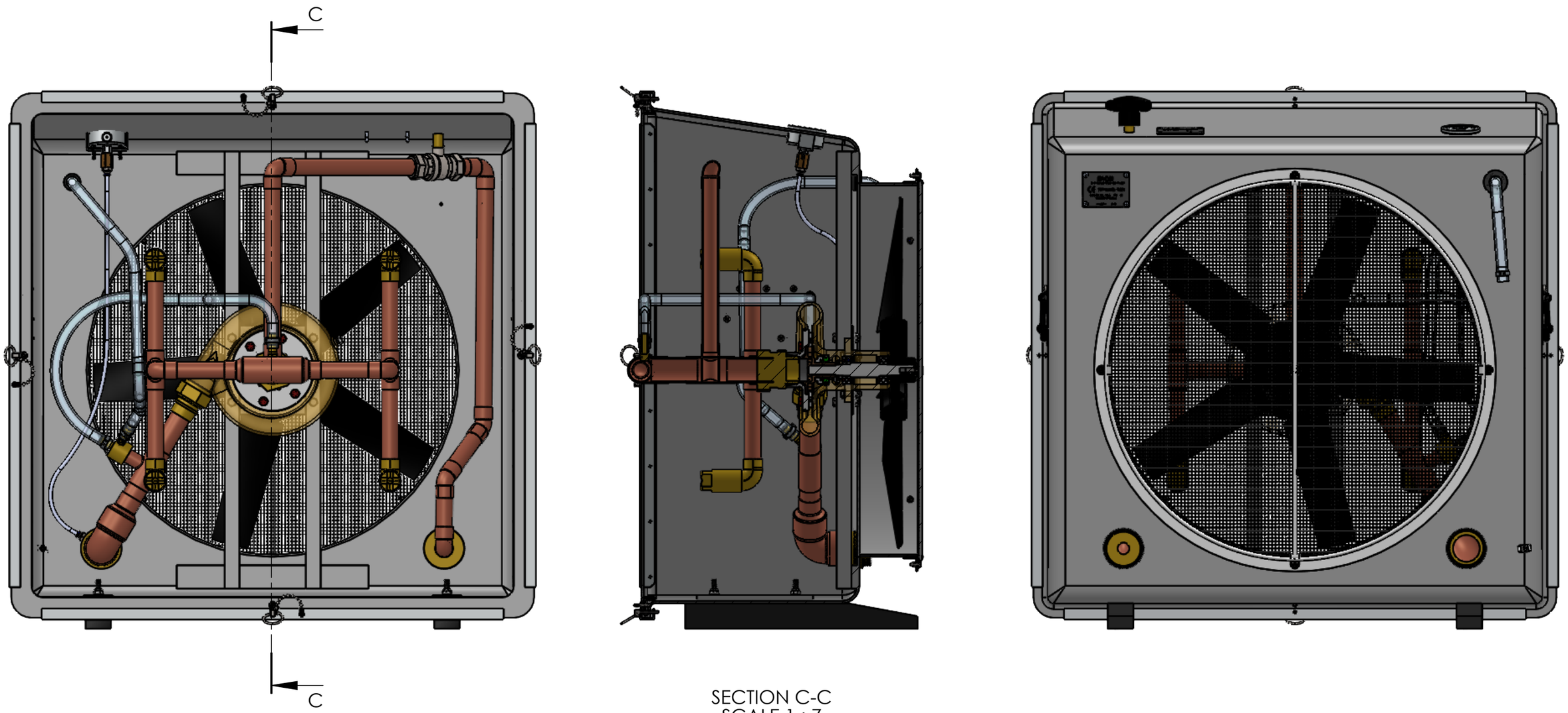

SECTION C-C
SCALE 1 : 7

*** VISUAL AID FOR PRODUCTION ***

DELTA FIRE

2 BURTT WAY
BROADLAND BUSINESS PARK
NORWICH
NR7 0FE
TEL: (+44 (0)1603 735000)
FAX: (+44 (0) 1603 735009)

MATERIAL	AS PARTS	FINISH	AS PARTS
DRAWN	TMH	TOLERANCES (UNLESS OTHERWISE STATED)	0. - ±0.2mm
DATE	19/01/2023		0.0 - ±0.1mm
CHECKED	PTJ		0.00 - ±0.05mm
			ANGULAR - ±0.5°

TITLE
EXCEL HIGH EXPANSION FOAM GENERATOR 2" BSP MALE

DRAWING No. FEP341000 REV. C

(1) ALL BURRS AND SHARP EDGES TO BE REMOVED.
(2) DO NOT SCALE DRAWING.

THIS DOCUMENT IS COPYRIGHTED, ALL RIGHTS RESERVED. THIS DOCUMENT MAY NOT, IN WHOLE OR PART, BE COPIED PHOTOGRAPHED, REPRODUCED OR TRANSLATED IN ANYWAY OR FORM WHATSOEVER, WITHOUT THE PRIOR WRITTEN CONSENT OF DELTA FIRE LTD.

SH. 3
OF 3

3rd ANGLE PROJECTION

A3

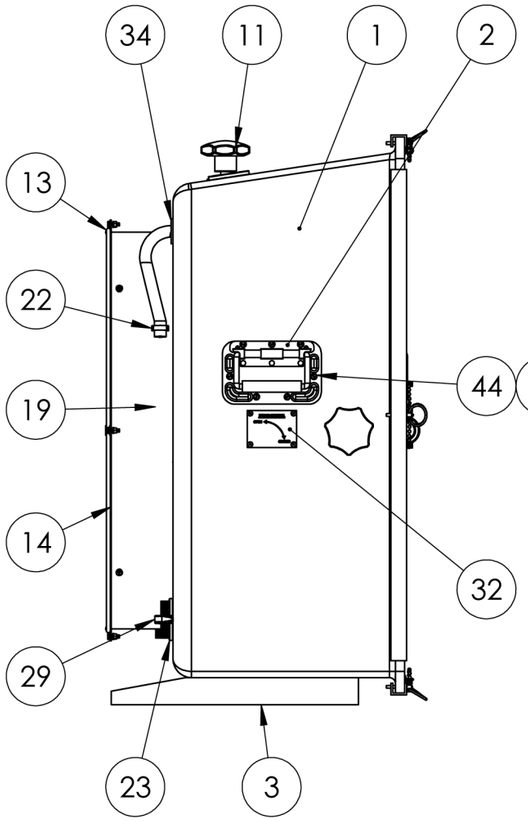

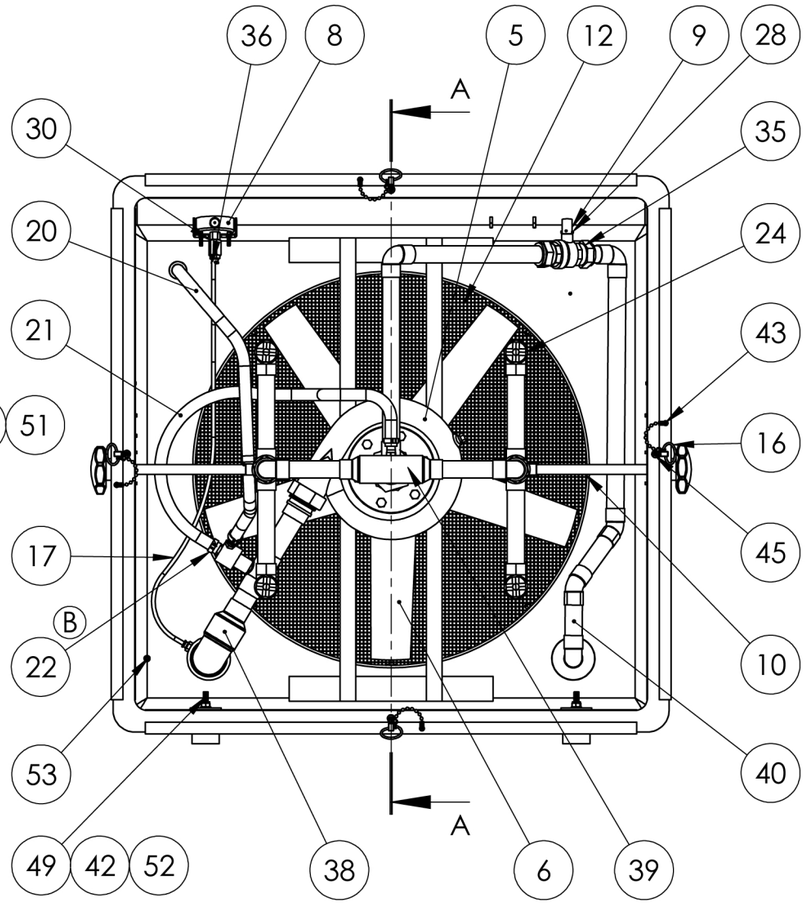

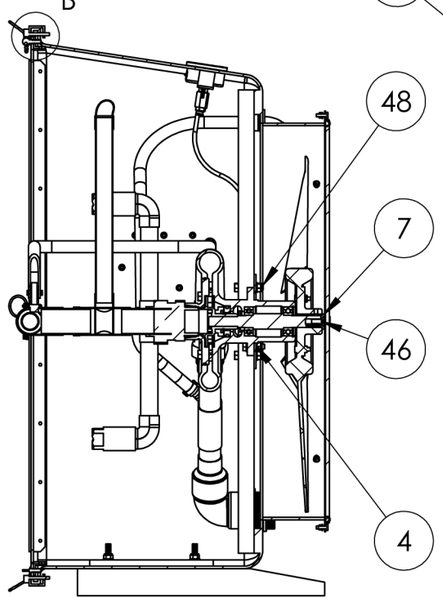

SECTION A-A
SCALE 1 : 10

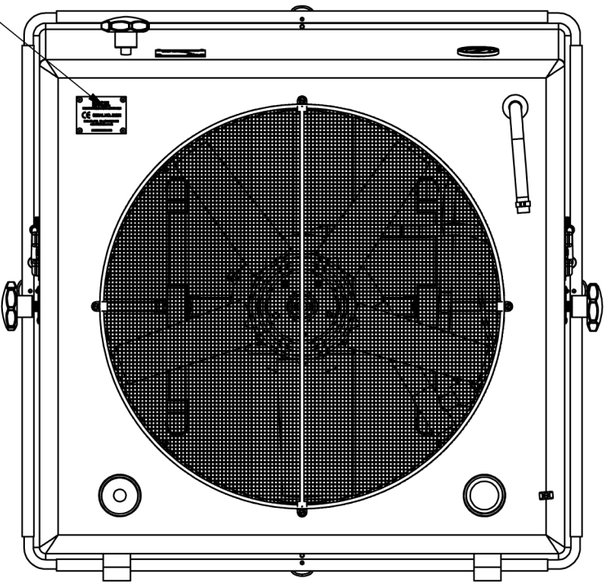

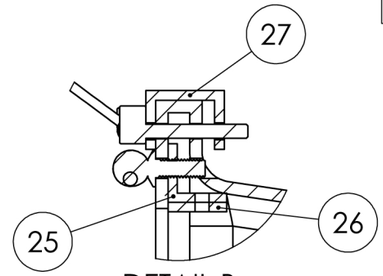

DETAIL B

ITEMS NOT SHOWN: 15, 18, 31, 37

REV.	DESCRIPTION	ECN	DATE	SIG.
C	VARIOUS SMALL UPDATES SEE ECR	2269	01/02/2024	JRS
B	SWAPPED JUBILEE FOR OETIKA CLIPS	2227	02/11/2023	TMH
A	INITIAL RELEASE	2093	19/01/2023	TMH

DELTA FIRE

2 BURTT WAY
BROADLAND BUSINESS PARK
NORWICH
NR7 0FE
TEL: (+44 (0)1603 735000)
FAX: (+44 (0) 1603 735009)

MATERIAL	AS PARTS
DRAWN	TMH
DATE	19/01/2023
CHECKED	PTJ

FINISH: AS PARTS

TOLERANCES
(UNLESS OTHERWISE STATED)
0. - ±0.2mm
0.0 - ±0.1mm
0.00 - ±0.05mm
ANGULAR - ±0.5°

TITLE: EXCEL HIGH EXPANSION FOAM GENERATOR 2" BSP MALE (SMOKE EXTRACTION VERSION)

DRAWING No. FEP351000

REV. C

(1) ALL BURRS AND SHARP EDGES TO BE REMOVED.
(2) DO NOT SCALE DRAWING.

THIS DOCUMENT IS COPYRIGHTED, ALL RIGHTS RESERVED. THIS DOCUMENT MAY NOT, IN WHOLE OR PART, BE COPIED PHOTOGRAPHED, REPRODUCED OR TRANSLATED IN ANYWAY OR FORM WHATSOEVER, WITHOUT THE PRIOR WRITTEN CONSENT OF DELTA FIRE LTD.

SH. 1
OF 3

3rd ANGLE PROJECTION

A3

ITEM NO.	PART NUMBER	DESCRIPTION	QTY.
1	XFDME1000 SE	EXCEL BODY	1
2	XFDME1001	EXCEL SURFACE HANDLE	2
3	XFDME1002	EXCEL FEET	2
4	XFDME1004	EXCEL BACKING PLATE	1
5	XFDME1005	TURBINE ASSEMBLY	1
6	XFDME1006	MULTIWING IMPELLER	1
7	XFDME10061	EXCEL COUNTERSUNK FAN WASHER	1
8	XFDME1007	PRESSURE GAUGE 1/4" BSP PARALLEL MALE BACK ENTRY	1
9	XFDME1008	TOP EXPANSION CONTROL SHAFT	1
10	XFDME1008L	EXPANSION CONTROL SHAFT	2
11	XFDME1009	CONTROL KNOBS	3
12	XFDME1010	GRILL COMPLETE	1
13	XFDME1011	GRILL FIXING CLIPS	4
14	XFDME1012	BODY PROTECTION RING	1
15	XFDME1013	FOAM NET	1
16	XFDME1015	NET (LYNCH) PIN	4
17	XFDME1017	PRESSURE GAUGE PIPE	1
18	XFDME1019	EXCEL 30M CLEAR POLYTHENE DUCTING	1
19	XFDME1020	PICK-UP TUBE	1
20	XFDME1021 A	1/2" BORE BRAIDED PVC TUBE	1
21	XFDME1021 B	1/2" BORE BRAIDED PVC TUBE	1
22	XFDME1022	3/4" OETIKA CLIP	4
23	XFDME1028	LOCKING RING	2
24	XFDME1029	EXCEL 200 SWIRLER NOZZLE ASSEMBLY	4
25	XFDME1047	NET ANGLE	4
26	XFDME1048	NET FLAT	4
27	XFDME1049	NET CHANNEL	4

ITEM NO.	PART NUMBER	DESCRIPTION	QTY.
28	XFDME1101	3.0 X 20 TENSION SPRING	3
29	XFDME1102	WHITE OPEN CLIP	1
30	XFDME1103	1/4" FEMALE HEX SOCKET	1
31	XFDME2010	BYPASS CONTROL LABEL	1
32	XFDME2020	FOAM CONTROL LABEL	2
33	XFDME2030	EXCEL LABEL	1
34	XFDMFC107	TANK BUSH	1
35	XFEFE1025	1" BALL VALVE	3
36	XFEFE1046	1/4" BSP PNEUMATIC FITTING 101250628	2
37	XFE000002	SMOKE DUCTING 7.5M X 698MM I/D L/W RED POLYESTER	1
38	XFEXCEL03	EXCEL PIPEWORK ASSEMBLY - INLET	1
39	XFEXCEL02	EXCEL PIPEWORK ASSEMBLY - B	1
40	XFEXCEL04	EXCEL PIPEWORK ASSEMBLY - OUTLET	1
41	XNU050001	M5 STAINLESS NYLOCK NUT	23
42	XNU080001	M8 NYLOC	12
43	XSC041005	M4 X 10 SPH SCREW	4
44	XSC051605	M5 X 16 SPH SCREW A4	22
45	XSC061606	SHOULDERLESS THUMB HEAD SCREW	4
46	XSC081605	M8 X 16 COUNTERSUNK HEX SCREW	1
47	Default	M8 x 30 HEX HEAD SCREW A4	4
48	XSC084008	M8 X 40 HEX HEAD SCREW A4	4
49	XSC087508	M8 X 75 HEX HEAD SCREW A4	4
50	XR0000002	4mm RIVET	16
51	XWA050001	M5 FLAT WASHER A4	45
52	XWA080001	M8 FLAT WASHER A4	16
53	XSC052504	M5 X 25 CSK HEAD SCREW A4	1

DELTA FIRE

2 BURTT WAY
BROADLAND BUSINESS PARK
NORWICH
NR7 0FE
TEL: (+44 (0)1603 735000)
FAX: (+44 (0) 1603 735009)

MATERIAL AS PARTS

FINISH AS PARTS

DRAWN TMH

DATE 19/01/2023

CHECKED PTJ

TOLERANCES (UNLESS OTHERWISE STATED)
0. - ±0.2mm
0.0 - ±0.1mm
0.00 - ±0.05mm
ANGULAR - ±0.5°

TITLE
EXCEL SE HIGH EXPANSION FOAM GENERATOR 2" BSP MALE (SMOKE EXTRACTION VERSION)

DRAWING No. **FEP351000**

REV. C

(1) ALL BURRS AND SHARP EDGES TO BE REMOVED.
(2) DO NOT SCALE DRAWING.

THIS DOCUMENT IS COPYRIGHTED, ALL RIGHTS RESERVED. THIS DOCUMENT MAY NOT, IN WHOLE OR PART, BE COPIED PHOTOGRAPHED, REPRODUCED OR TRANSLATED IN ANYWAY OR FORM WHATSOEVER, WITHOUT THE PRIOR WRITTEN CONSENT OF DELTA FIRE LTD.

3rd ANGLE PROJECTION

A3

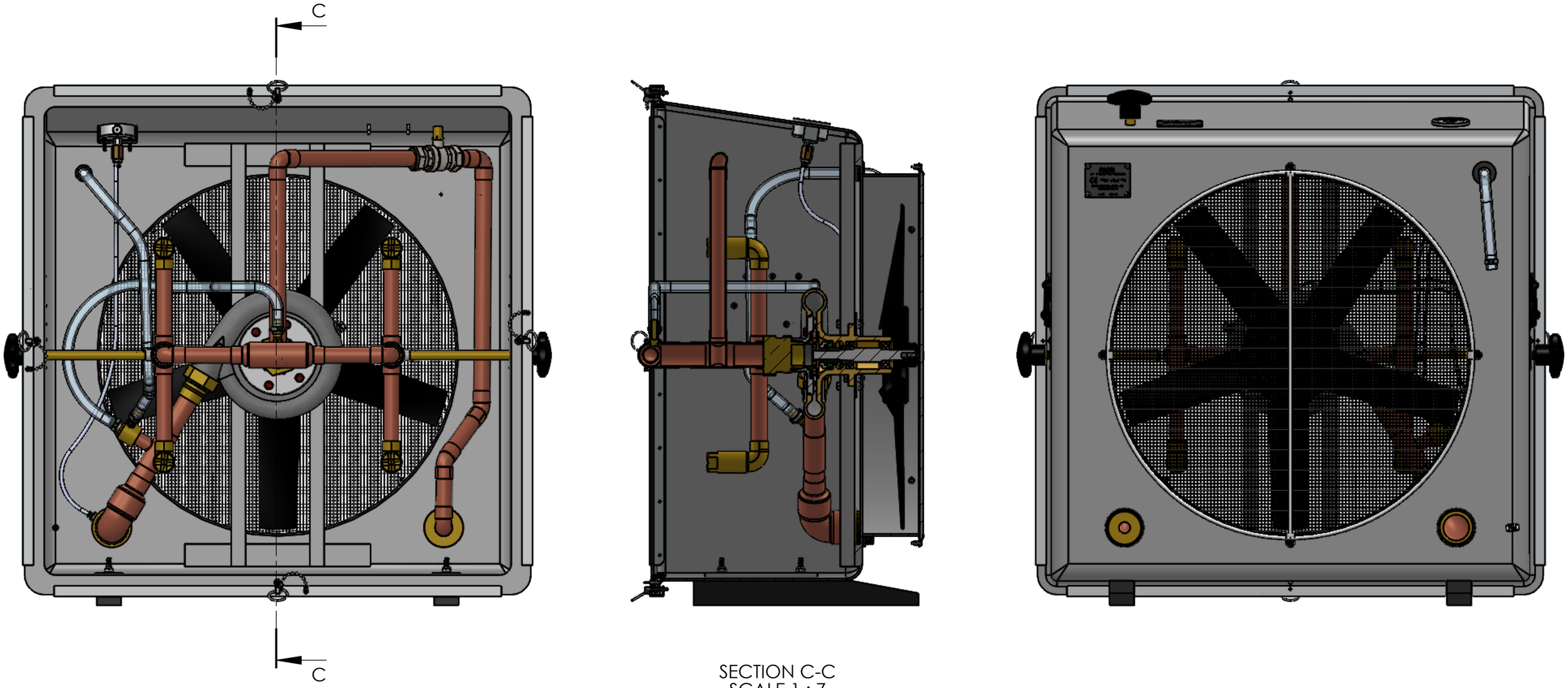

SECTION C-C
SCALE 1 : 7

VISUAL AID FOR PRODUCTION

DELTA FIRE
2 BURTT WAY
BROADLAND BUSINESS PARK
NORWICH
NR7 0FE
TEL: (+44 (0)1603 735000)
FAX: (+44 (0) 1603 735009)

MATERIAL: MULTI MATERIAL		FINISH:	TITLE: EXCEL HIGH EXPANSION FOAM GENERATOR 2" BSP MALE (SMOKE EXTRACTION VERSION)
DRAWN	TMH	TOLERANCES (UNLESS OTHERWISE STATED)	DRAWING No. FEP351000 — REV. C
DATE	19/01/2023	0. - ±0.2mm 0.0 - ±0.1mm 0.00 - ±0.05mm ANGULAR - ±0.5°	(1) ALL BURRS AND SHARP EDGES TO BE REMOVED. (2) DO NOT SCALE DRAWING.
CHECKED	PTJ		SH. 3 / OF 3

THIS DOCUMENT IS COPYRIGHTED, ALL RIGHTS RESERVED. THIS DOCUMENT MAY NOT, IN WHOLE OR PART, BE COPIED PHOTOGRAPHED, REPRODUCED OR TRANSLATED IN ANYWAY OR FORM WHATSOEVER, WITHOUT THE PRIOR WRITTEN CONSENT OF DELTA FIRE LTD.